REV	DATE	DESCRIPTION	DRAWN	CHECKED
-	30/03/21	DRAWING CREATED	MF	MF

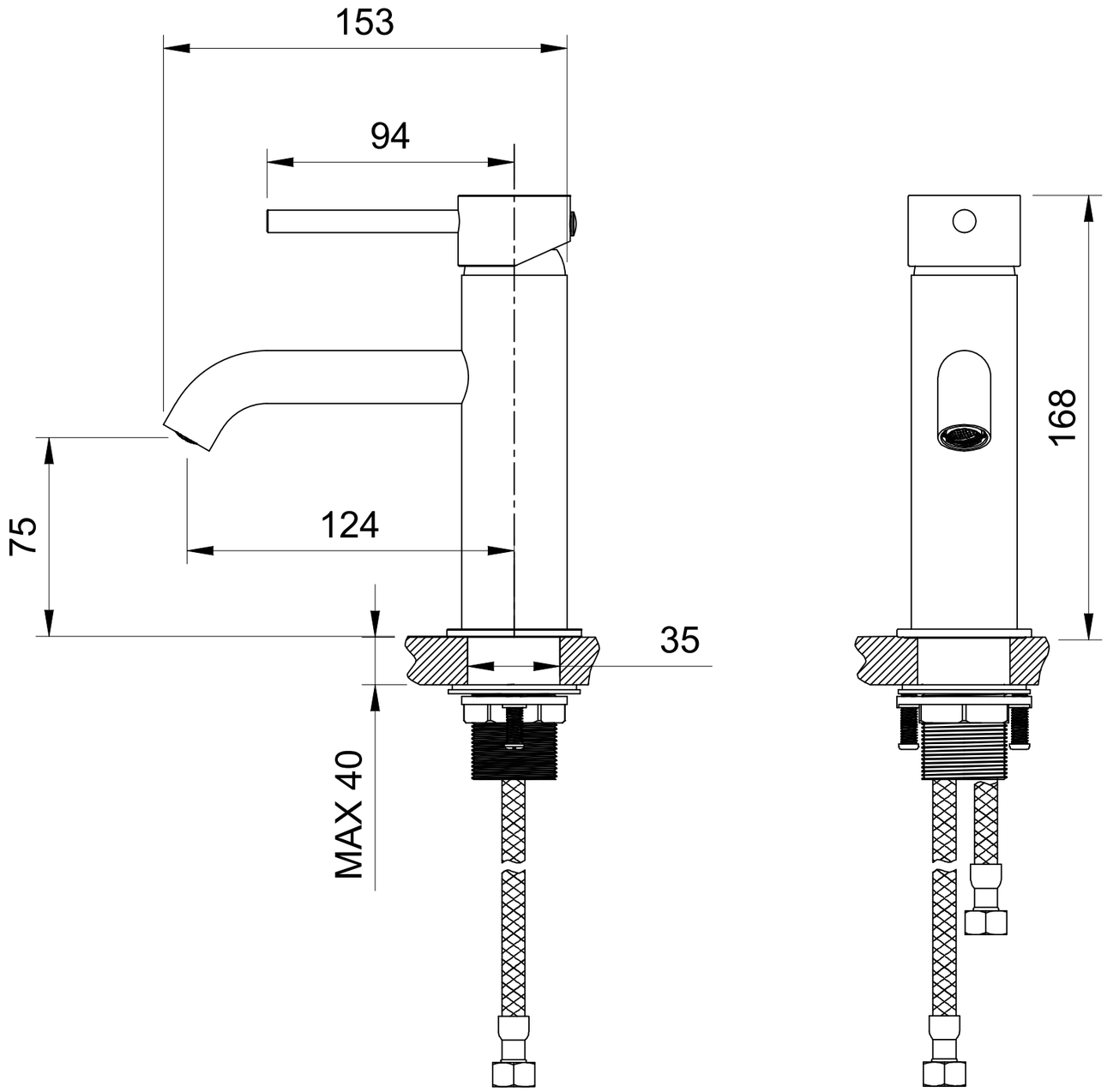

	CHROME	BRASS	MATT BLACK
PRODUCT CODE	ST-BAS-CP	ST-BAS-BB	ST-BAS-MB
CONSTRUCTION	BRASS BODY CuZn40Pb2, EN CW617N (EQUIVALENT TO CZ122) ZINC ALLOY HANDLE	BRASS BODY CuZn40Pb2, EN CW617N (EQUIVALENT TO CZ122) ZINC ALLOY HANDLE	BRASS BODY CuZn40Pb2, EN CW617N (EQUIVALENT TO CZ122) ZINC ALLOY HANDLE
FINISH	CHROME: Ni: 8-12um, Cr: 0.25-0.3um	BRUSHED BRASS	MATT BLACK
PRODUCT TYPE	CONTEMPORARY	CONTEMPORARY	CONTEMPORARY
WATER PRESSURE	MIN. 0.5 BAR, MAX. 6.0 BAR	MIN. 0.5 BAR, MAX. 6.0 BAR	MIN. 0.5 BAR, MAX. 6.0 BAR
PLUMBING SYSTEMS	SUITABLE FOR ALL SYSTEMS	SUITABLE FOR ALL SYSTEMS	SUITABLE FOR ALL SYSTEMS
CARTRIDGE	25mm CERAMIC DISC CARTRIDGE	25mm CERAMIC DISC CARTRIDGE	25mm CERAMIC DISC CARTRIDGE
AERATOR	ADJUSTABLE SLIM AERATOR	ADJUSTABLE SLIM AERATOR	ADJUSTABLE SLIM AERATOR
FITTING	UK: M10 X 350mm 1/2" BSP FEMALE FLEXI TAILS	UK: M10 X 350mm 1/2" BSP FEMALE FLEXI TAILS	UK: M10 X 350mm 1/2" BSP FEMALE FLEXI TAILS
ADD INFO	SUPPLIED WITH G 1 1/4" SPRUNG WASTE (UK ONLY)	SUPPLIED WITH G 1 1/4" SPRUNG WASTE (UK ONLY)	SUPPLIED WITH G 1 1/4" SPRUNG WASTE (UK ONLY)

FLOW RATES (Litres per minute)

SYSTEM PRESSURE	0.1 BAR	0.2 BAR	0.3 BAR	0.5 BAR	1.0 BAR	1.5 BAR	2.0 BAR	3 BAR	4.0 BAR	5.0 BAR
	-	2.3	3.0	4.0	6.0	7.3	8.8	10.5	12.3	14.0

THE LUXURY BATH COMPANY

CREATED	DRAWN BY	CHECKED BY
30/03/21	MF	MF

DRAWING TITLE: MONOBLOC BASIN MIXER TAP

DRAWING No.	CURRENT REV.	SHEET	SHEET SIZE	SCALE
ST-BAS	-	1/1	A3	1:2