REV	DATE	DESCRIPTION	DRAWN	CHECKED
-	17/02/21	DRAWING CREATED	MF	MF

A-A SCALE @ 1:5

A-A

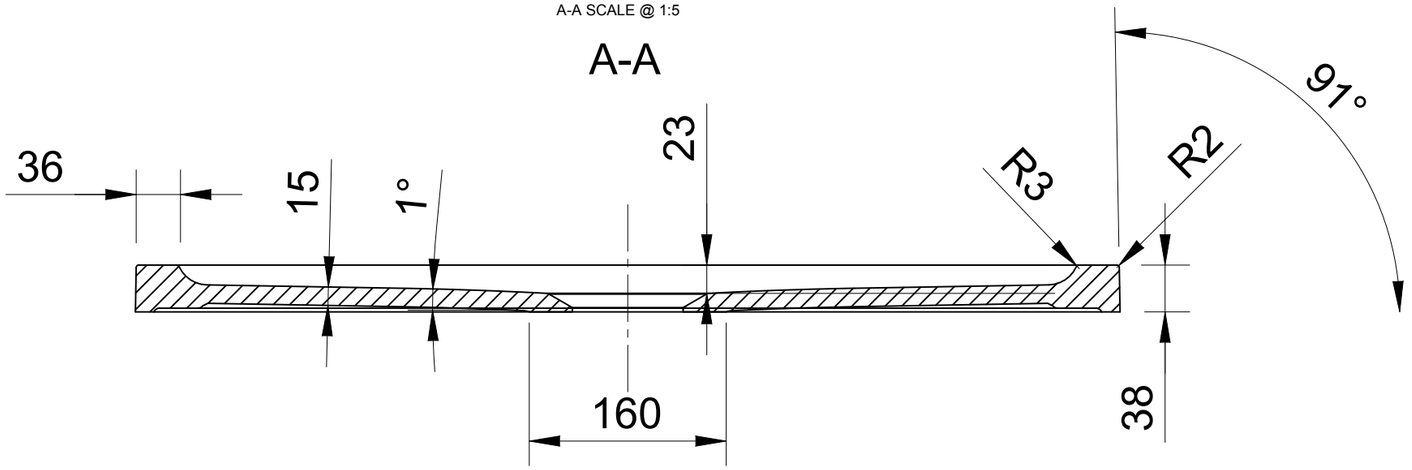

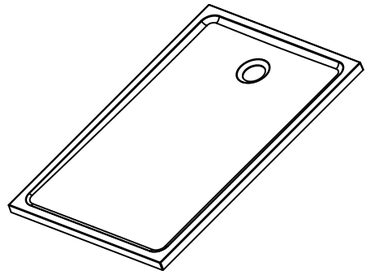

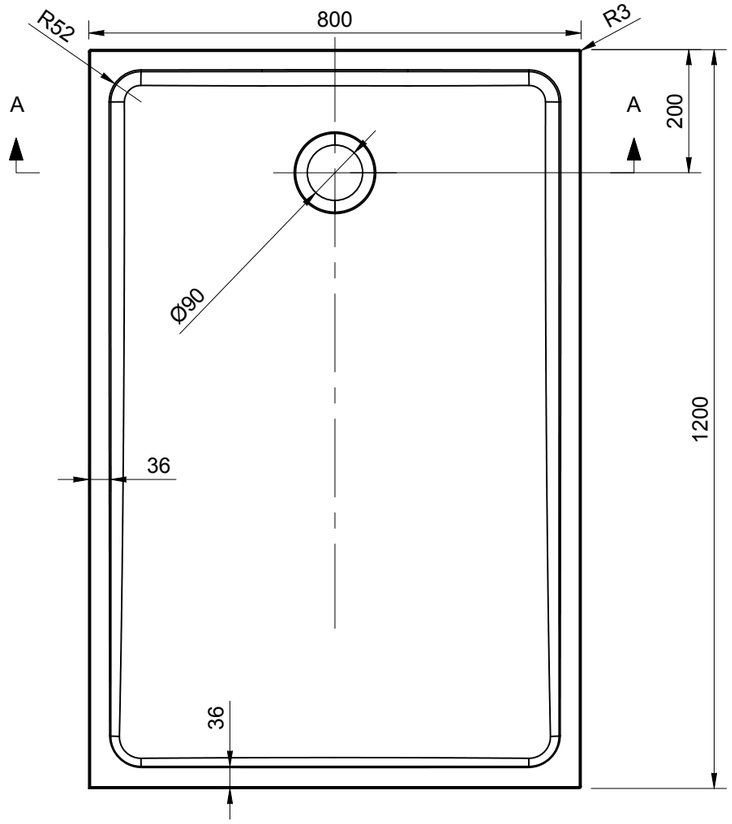

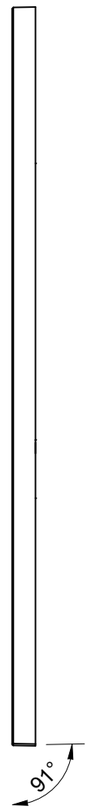

BOTTOM VIEW

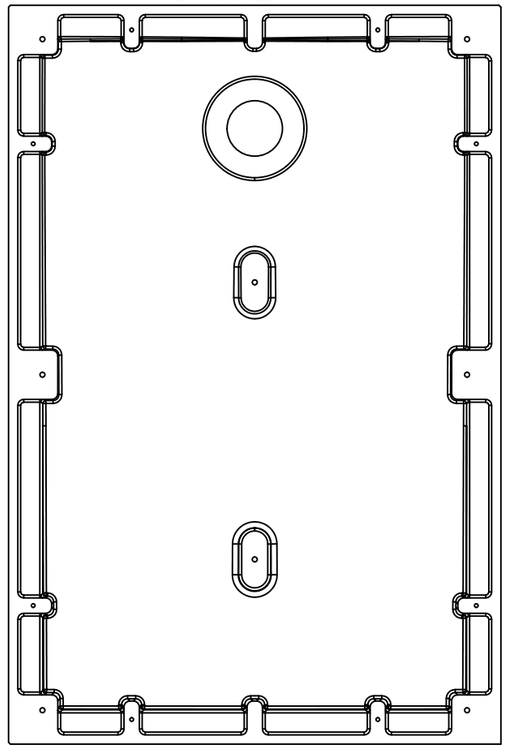

TOLERANCE LENGTH / WIDTH		+5/0mm
TOLERANCE HEIGHT		+2/-2mm
TOL. PLANE BENDING	≤ 1200mm	+2 / -2mm
	> 1200mm	+3 / -3mm
TOLERANCE THICKNESS		+2 / -2mm
TOLERANCE FEET LOCATION		+7 / -7mm
TOLERANCE HOLE OCATION		+2 / -2mm
TOLERANCE HOLE DIAMETER		+1 / -1mm

CREATED	DRAWN BY	CHECKED BY	DRAWING TITLE	DRAWING No.	CURRENT REV.	SHEET	SHEET SIZE	SCALE
17/02/21	MF	MF	LOWRY SHOWER TRAY 1200 X 800	LOW-ST-12X8	-	1/1	A3	1:10

THE LUXURY BATH COMPANY

OVERFLOW	WASTE	TAPHOLE	MAIN DIMENSIONS
NO	REGULAR	0	1200 X 800 X 38
NET WEIGHT	GROSS WEIGHT		
34.83kg	38.31kg		