REV	DATE	DESCRIPTION	DRAWN	CHECKED
-	31/01/21	DRAWING CREATED	MF	MF

A-A SCALE 1:2

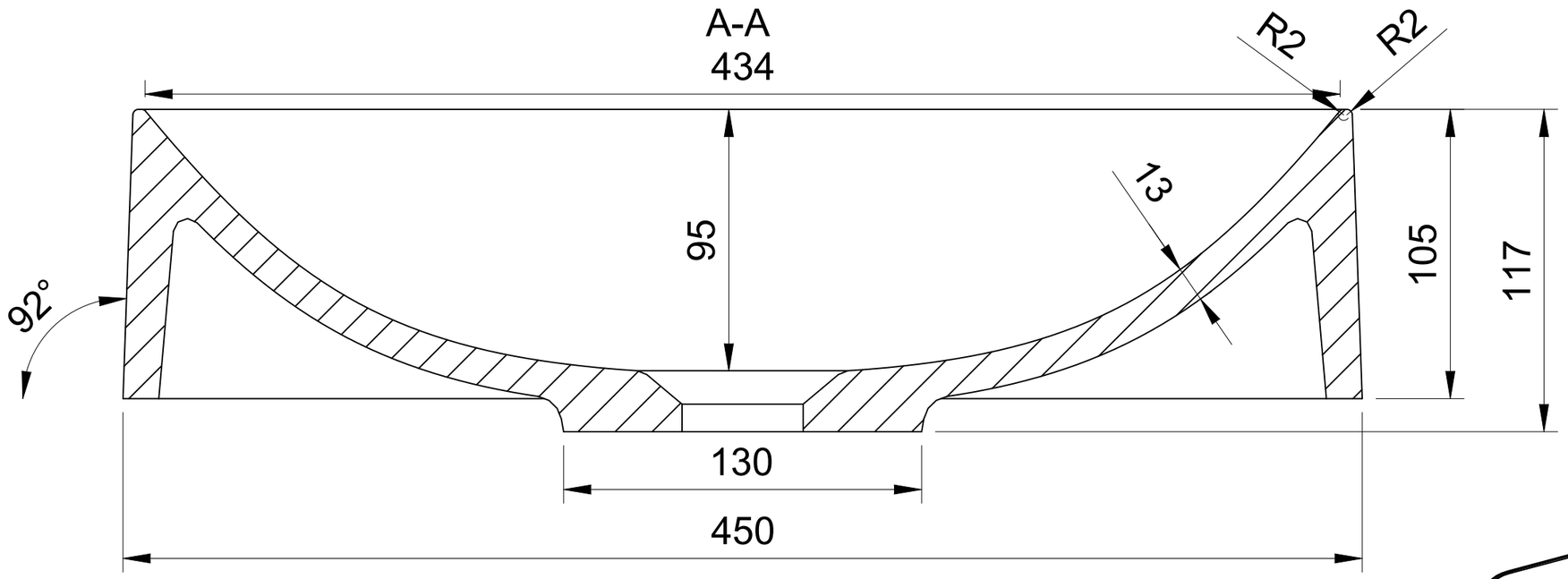

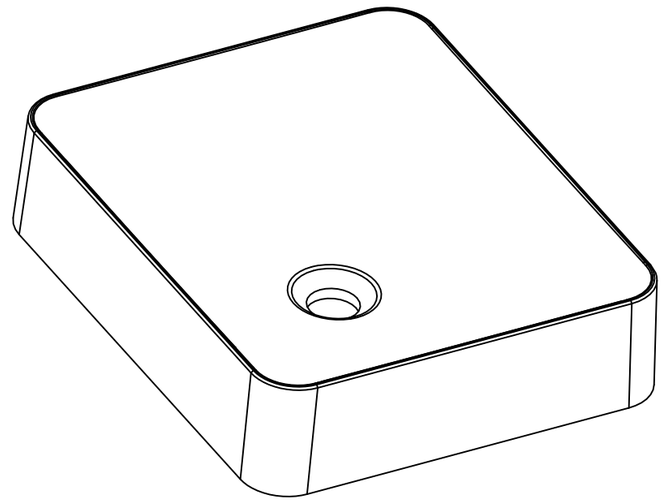

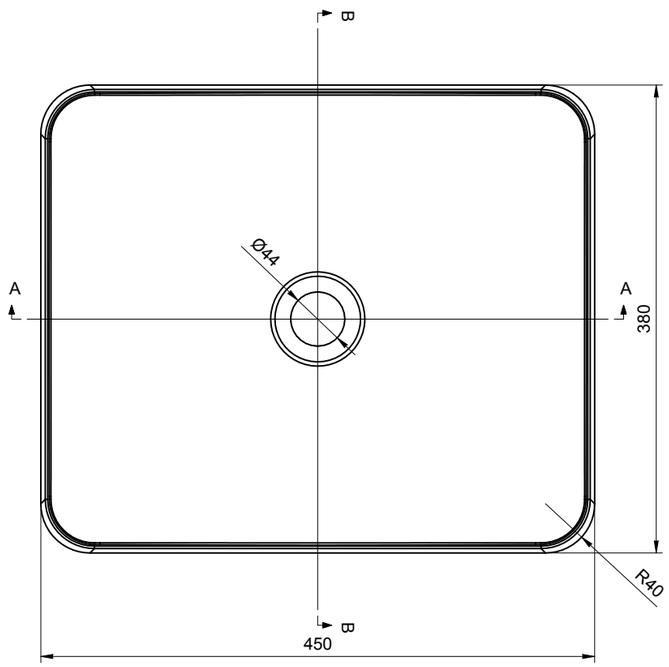

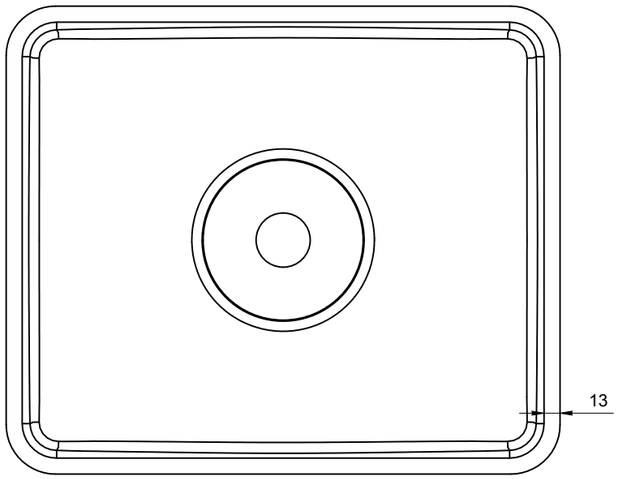

BOTTOM VIEW

TOLERANCE TOTAL	LENGTH	+3 / 0mm
	WIDTH	+2 / 0mm
	HEIGHT	+2 / -2mm
TOL. HEIGHT SIDE WALLS	≤ 25mm	+1 / -1mm
	> 25mm	+2 / -2mm
TOLERANCE HOLES LOCATION		+3 / -3mm
TOLERANCE HOLES DIAMETER		+1 / -1mm
TOLERANCE PLANE BENDING		+1.5 / -1.5mm

CREATED	DRAWN BY	CHECKED BY	DRAWING TITLE	DRAWING No.	CURRENT REV.	VARIANT 1 - GLOSS FINISH / VARIANT 1 - MATT FINISH	SHEET	SHEET SIZE	SCALE
31/01/21	MF	MF	GILPIN SQUARE BASIN	GIL-WB-SQ	-	GIL-WB-SW-GW / GIL-WB-SQ-MW	1/1	A3	1:5

THE LUXURY BATH COMPANY

OVERFLOW	WASTE	TAPHOLE	MAIN DIMENSIONS
NO	REGULAR	0	450X 380 X 107

NET WEIGHT	GROSS WEIGHT	BASIN VOLUME
8.8kg	10.1kg	FULL = ***L OVERFLOW= ***L